Guide rail kit for Semisom /50

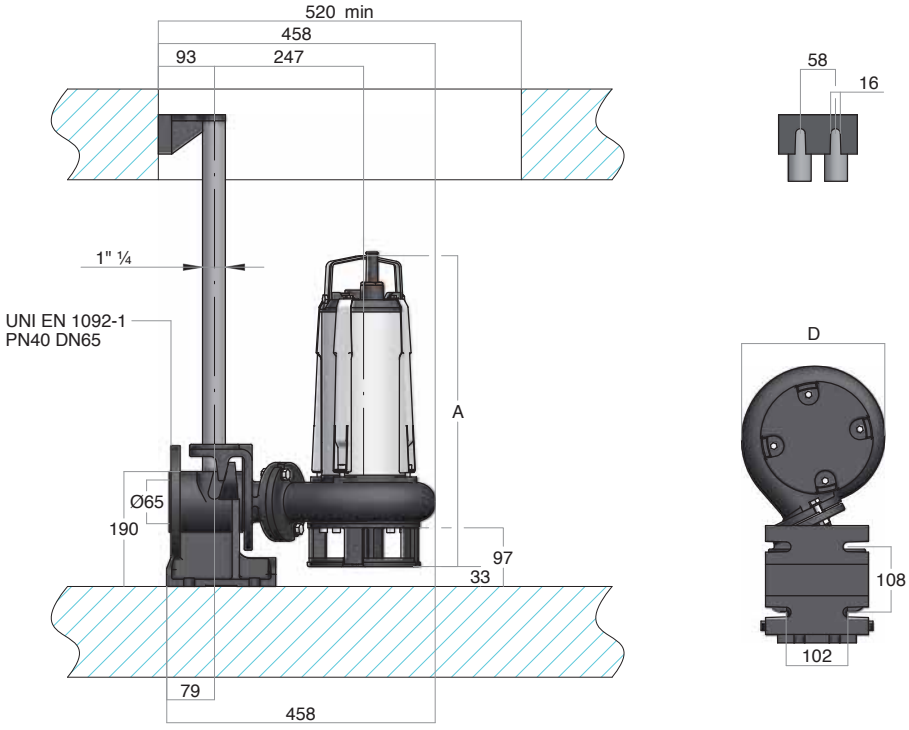
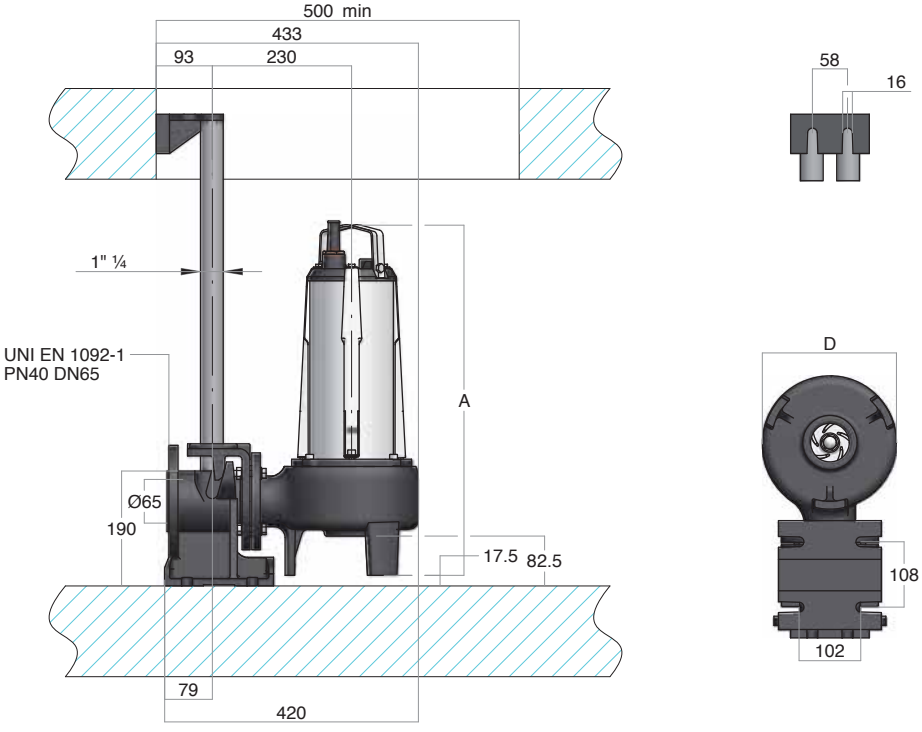
Guide rail kit for Semisom /65